WELAND ALUMINIUM AB
This document must not be copied without our written permission and the contents thereof must not be imparted to a third party nor be used for any unauthorized purpose. Contravention will be prosecuted.

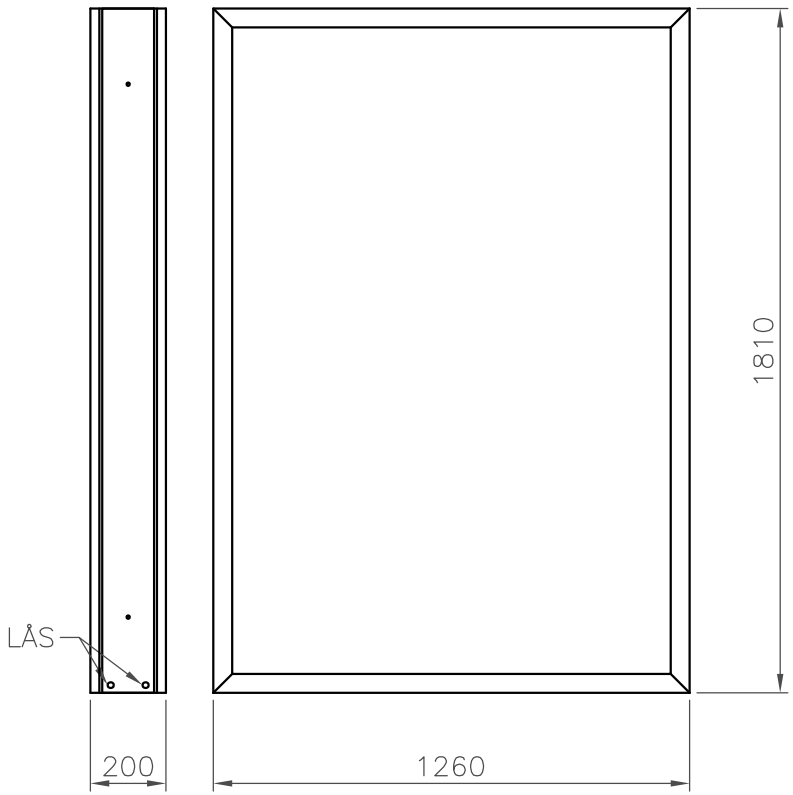

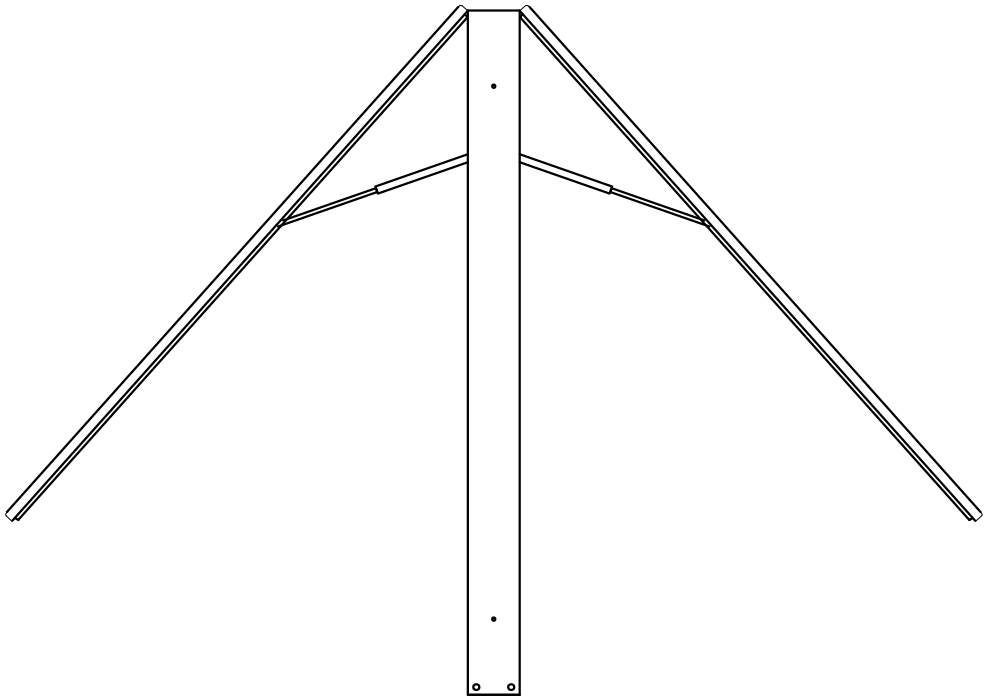

Det.nr	Ant.	Benämning	Material	Mod.nr ämne Dimension	Anm.
–	–	–	–	–	–

Konstr.	Ritad	Kop.	Kontr.	Stand.	Format	Skala	Generell tolerans
–	KO	–	–	–	A4	1:20	–

OMNI TRAFIKMILJÖ
BJÖRNSTORPSVÄGEN 2 TFN 0472–44500
342 30 ALVESTA FAX 0472–40029

VITRIN
STANDARD
–

Objektnummer	Datum
–	2004–04–26

Ritningsnummer	Rev.
VITRIN VY	–

Nr.	Ant.	Ändring och/eller medd.–nr	Datum	Inf.	Godk.